Recording properties of an electrode implanted in the peripheral nervous system: a human computational model

Béryl Jehenne, Stanisa Raspopovic, Marco Capogrosso, Angelo Arleo and Silvestro Micera, *Senior Member, IEEE*

***Abstract*— Chronically implanted neural interfaces are aiming to create an intimate and long-term contact with neural cells. This would potentially allow the development of neurocontrolled artificial devices. However the precise nature of the compound signal recorded and the interaction between the neural population and the electrode are still poorly understood. Consequently there is limited knowledge available on the optimal strategy for the design of peripheral electrodes in order to achieve high information harvest while insuring long-term reliability of the device.**

In this paper, we introduce a novel integrated hybrid Finite Elements/Biophysical model for recording, based on anatomical data of the human median nerve. Using this model, we simulated the signal recorded intrafascicularly with implanted Transversal Intraneural Multichannel Electrode (TIME). The preliminary results help in understanding the properties of recorded signals and suggest that a substantial portion of the spikes detected with electrodes implanted in the peripheral nervous system might actually be multi-unit events formed by the superposition of several fibers activity.

I. Introduction

Neuro-controlled prosthetic devices would enable for effortless, intuitive, and close-to-natural control by neurologically impaired users [1]. However, in order to achieve such an ambitious goal, the sensing device (implanted electrode), should be able to record selectively and in a stable manner the activity of a limited population of neural cells. For example, in the case of interfacing with the peripheral nervous system, intra-fascicular electrodes should be able to record the subsets of the fascicular population correlated to the user's fine motor intention (e.g. single finger flexion), while displaying a functioning life comparable to the user's one [2]. Several efforts have been performed in order to achieve that goal [3, 4]. However in the first case the signals were unstable, while in the last, the nature of the signals was uncertain. Therefore, there is a scientific and technological need to understand the nature of the complex interplay between ionic currents produced by axons and consequent recording of the electrical field by means of metal electrodes. To do so, we constructed a detailed finite elements model (FEM) of the human median nerve and combined it with a realistic implemented axons population whose activity was used to generate the electrical field recorded by an implanted electrode. Our hypothesis is that this will allow us to better understand the nature of the recorded signal and the population involved in its generation.

This research was supported in part by the EPIONE EU grant (Website: http://project-epione.eu/).

B. Jehenne, S. Raspopovic, M. Capogrosso and S. Micera are with the Ecole Polytechnique Federale de Lausanne (EPFL), CH-1015 Lausanne, Switzerland (phone: +41 2 16 93 10 48; e-mail: beryl.jehenne@epfl.ch, stanisa.raspopovic@epfl.ch, marco.capogrosso@epfl.ch, silvestro.micera@epfl.ch).

S. Raspopovic, M. Capogrosso and S. Micera are also with the Scuola Superiore Sant'Anna, 56127 Pisa, Italy (e-mail: s.raspopovic@ssup.it, m.capogrosso@ssup.it, micera@ssup.it).

B. Jehenne and A. Arleo are with the Institut de la Vision, 75012 Paris, France (e-mail: angelo.arleo@inserm.fr).

II. Materials and Methods

A. General Model Architecture

The present model aims at recreating the electrical activity recorded via a given invasive electrode and generated by a chosen peripheral nerve fibers population. The simulator was constructed as a group of subsystems each focusing on a different physical aspect of the process. The nerve population is decomposed in a series of sources created via a biophysical model. The effect of each source on the electrical field of the nerve is then computed independently through a finite element model. The population signal is finally assembled at the electrode and post processed to emulate the transformation undergone by experimental recordings.

B. Neural Population

The nerve was populated with a series of independent myelinated fibers whose activity can be individually controlled. Each cell was modeled using a double cable biophysical model specially tuned for mammalian peripheral nerve and implemented in NEURON [5]. The electrical properties of such cells strongly depend on their diameter. Our population followed the diameter distribution reported experimentally [6]. As a first estimate, we limited the present simulation to the discrete set of diameters proposed in the original model [5] and already validated.

For each fiber we recorded the current crossing the cell membrane at the 4 nodes of Ranvier closest to the electrode. The electric field generated decreasing rapidly in space, those were considered as the most significant contributors. These currents were passed as input parameter to the FEM.

C. 3D Nerve Model

The complexity of the 3D shape and electrical structure of a nerve and electrode play a primordial role on the properties of recorded signals [7]. To fully take both aspects into consideration, we developed a FEM based on the anatomical structure of a human median nerve. The shape of the nerve and its fascicles were extracted from histological pictures [8] with the use of ImageJ and then extruded in an 80mm long segment (optimal length found for convergence of the FEM solution). The nerve was implanted with a virtual Transversal Intraneural Multichannel Electrode (TIME) built in polyimide and platinum following the dimension described in [9]. This whole geometry (Fig. 1) was built, meshed and

TABLE I. ELECTRICAL PROPERTIES OF MATERIALS USED IN THE SIMULATION

Material	Conductivity: σ (S/m)
Epineurium	0.0826
Endoneurium (transversal)	0.0826
Endoneurium (longitudinal)	0.571
Perineurium	0.0021
Polyimide	6.67e-14
Saline	2

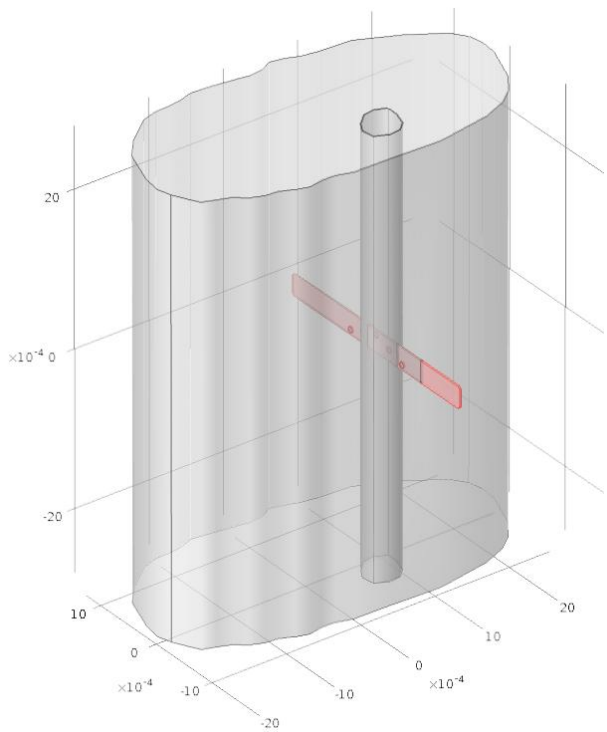

Figure 1. Detail of geometry used for the simulation: the fascicle containing the modeled fibers can be seen inside the nerve through transparence, implanted electrode in red. *(Scale in meters)*

solved in COMSOL Multiphysics 4.3b. All electrically relevant materials of the model were represented as different compartment with individual properties based on literature [10] (Table 1).

Each source defined from the neural population was represented by a point current source in the FEM and solved separately for extracellular distribution of electric potential V_e. The frequency range involved in our simulated signal being sufficiently low [11], we followed a quasi-static approximation of Maxwell's equation and the electromagnetic problem was solved with the Laplace Equation:

$$\nabla.\sigma\nabla V_e=0 \quad (1)$$

With Dirichlet boundary conditions set to zero at infinity (emulated by a large cylinder of saline solution of radius 60mm x 80mm high).

To simplify the mesh and save computing time, the final model (Fig. 1) focused on only one fascicle. This was deemed acceptable as the potential generated by a single nodal source decrease rapidly in space and have very limited effect outside of their fascicle (Fig. 2).

The quasi-static approximation meant we only had to solve the effect of each spatial source for a single value of its membrane current. Thanks to the implied linear scaling of the potential generated, the time dependent signal could then be reconstructed at the electrode surface.

D. Electrode Model

Single source contribution was calculated by averaging the spike shape over the surface of the electrode active sites (60µm diameter circular shape plated with a 300nm thick platinum layer [9]). These single spike shapes were then assembled per fiber to recreate each spike train according to the cell activity. The whole population signal was finally constructed by summing every independent spike train.

For more accuracy, we also modeled the interface between the electrode and the extracellular medium using the equivalent filtering circuit proposed in [12].

E. Noise Model

The background noise present in neural recordings is typically due distant cells activity. In this model, it arises

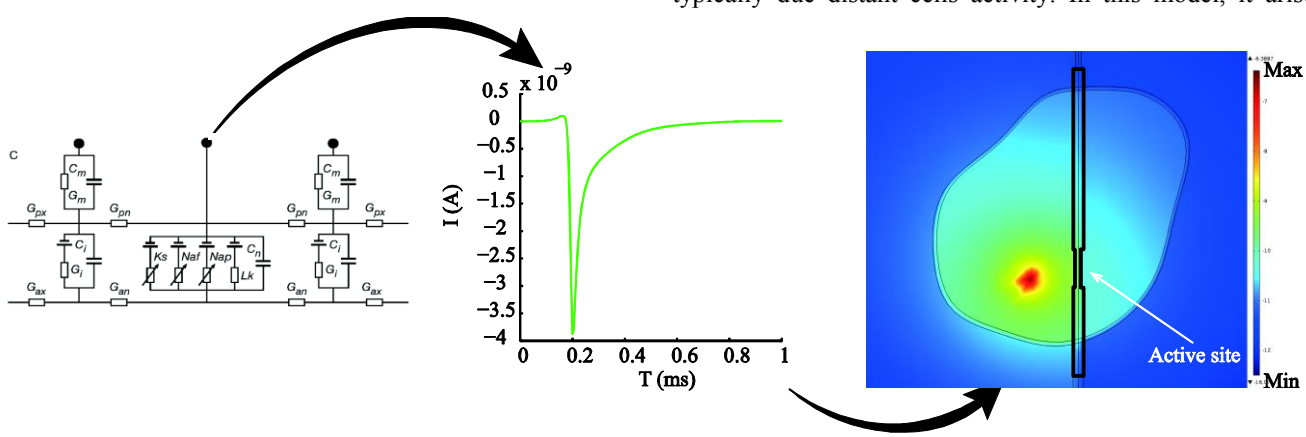

Figure 2. Representation of the biophysics model: the current crossing the cell membrane at the central node of the double cable model is used as an input by the FEM to compute the extracellular distribution of electric potential *(color bar: normalized log scale).*

from the overall population. In order to take into account smaller sources (thermal noise…) we also added a Gaussian noise with zero mean and a standard deviation of 1µV [13].

F. Experimental Filtering

The goal of this model is to help study the properties of recorded data. To be exploitable, experimental data typically require a form of preprocessing which might introduce distortion of the original signal. We recreated this by filtering our noisy signal with the same filter as currently used by our team experimenters on their experimental data (namely band pass Butterworth 3rd order filter with cutoff frequencies set at 500Hz and 5kHz).

G. Simulating the neural activity

We focused our analysis on a single fascicle. As a trade-off between the realistic number of approximately 2000 fibers which would populate such volume in a human median nerve and the computational time, we modeled 777 fibers. The final signal sampling rate was set at 200kHz to preserve the temporal detail of the spike shapes. The spike train of each single-unit followed a Poisson process, with a mean firing rate of 5Hz. Considering the diameters of the cells involved, such population could be assimilated to a group of slow adapting type I fibers innervating a single finger and responding at their peak sensitivity during the holding stage of a grasping task (static force) [14] (e.g. monitored by a hypothetical closed loop FES system to modulate grip force).

H. Spike Detection

As typically used for experimental data, spike detection was performed using an amplitude threshold set using the following expression:

$$\mathrm{Thr} = \mathrm{mean}(x) - 4\ \mathrm{std}(x) \qquad (2)$$

Where x is the simulated signal and std(x) its standard deviation as estimated by the std() function in Matlab.

III. Results

The processing time to generate each fiber activity was around 45min on an Intel Core i7 PC with a clock frequency of 3.4GHz.

The detected spike displayed shape similar to those observed in extracellular recordings. An analysis of their origin, showed that only 28% of them were created by the activity of a single fiber (Fig. 3a). The rest of the event detected actually corresponded to multi-unit spike. Such events were formed by the superposition of several action potentials originating from different fibers firing closely in time. As displayed in the example of (Fig. 3b), the event detected at the electrode (red dot line) is actually formed by the combination of 5 spikes fired by 5 independent fibers (thin violet lines). Each of these unitary action potentials is necessary for the multi-unit event to reach the detection threshold and becomes completely unidentifiable once mixed with the rest of the population.

The detected single-unit spikes originated from fibers close to the electrode active site. In general, the fibers contributing the most to the recording's amplitude were the one closest to the active site (Fig. 4a). This can be explained by the fact that, due to the nerve electrical and geometric

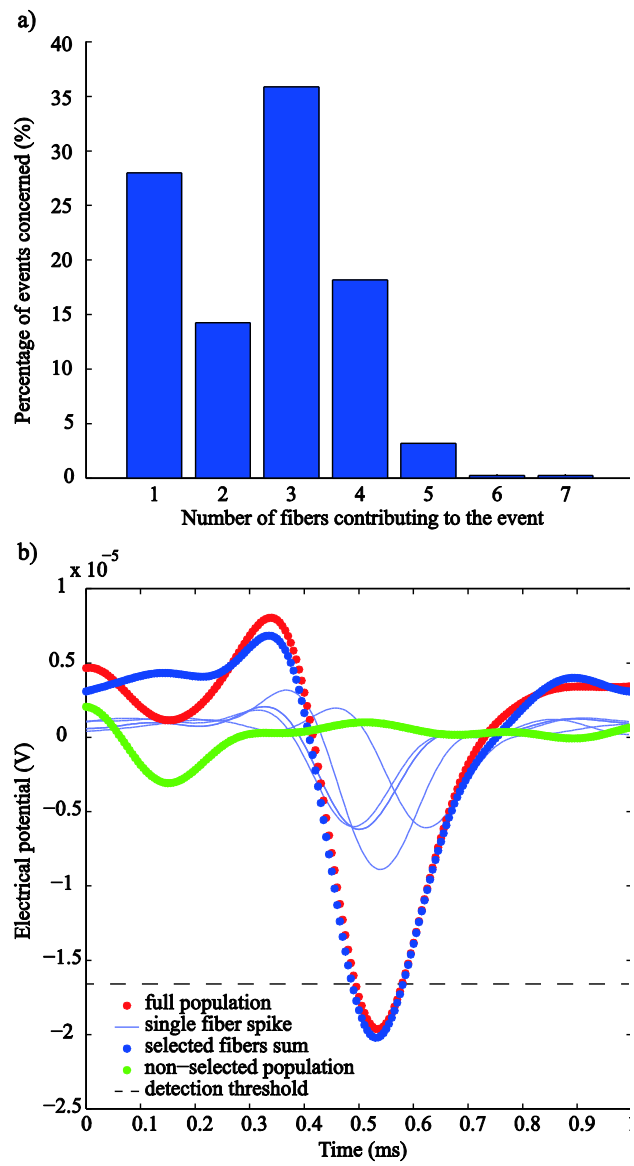

Figure 3. a) Percentage of events generated by the synchronous activity of the given number of fibers. b) Decomposition of a multi-unit spike into each separated fibers contributing and the remaining "silent" population.

properties, the electric field generated by the nodal source decreases rapidly in space. For this reason, and since the nodal current amplitude is more important for bigger fibers, we were expecting them to help more frequently a multi-unit event to reach the detection threshold. We were however surprised to observe that there did not seem to be any significant preference in the diameter of the fibers contributing (Fig. 4b). The portion of the population contributing to detected spikes is also larger than we were expecting in respect of the observed spatial dilution of electric field. Necessary contribution of faraway cells to reach detection threshold imply that multi-unit events might carry information about the synchrony of the full population rather than be restricted to local cells.

IV. Discussion and Conclusion

In this paper, we introduce a novel integrated hybrid Finite Elements/Biophysical model to simulate invasive recording.

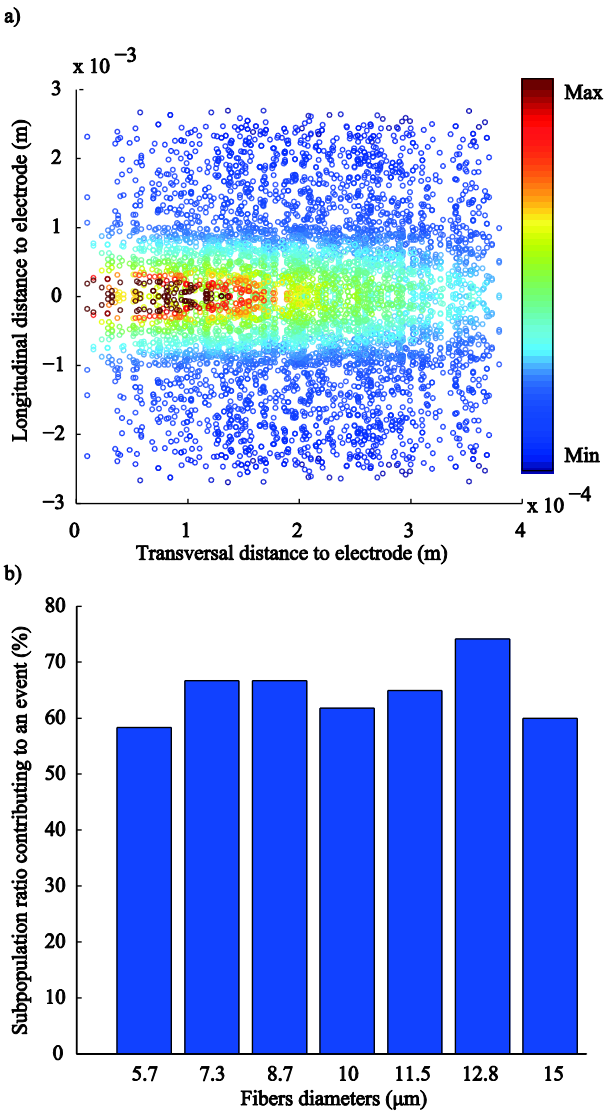

Figure 4. a) Effect of source-to-electrode distance on recording amplitude *(each circle indicate the position of a source, the color indicate the normalized amplitude of a spike from that source as recorded by an electrode centered at (0, 0))*. b) Ratio of each neural population (as defined by fiber diameter) contributing to at least one detected spike.

With this simulation, we observed that for a mean population firing frequency of 5Hz, most of the detectable spikes were actually created by the mixed activity of multiple independent cells. It is not uncommon for fibers conveying haptic information to fire at frequency largely superior to the one fixed in our simulation [14]. It is also probable that a real population, encoding different subpart of a single haptic object, would display more synchronicity than our model. Therefore, detecting only a so small proportion of single unit spikes in this modeled favorable situation tend to indicate that in many experimental setup, it might be almost impossible to detect single unit spike.

We also found evidence suggesting that, contrary to electrical stimulation of nerve, diameter of the fibers may not play a key role in their detection. Furthermore, even if fibers really close to the electrode might be detected as single-cell spike, they are also the most subject to be physically damaged by the insertion of the electrode and therefore most event detected with electrode implanted in the peripheral nervous system might actually come from the synchronous firing of fibers spread in the whole fascicle.

Regarding the limitations of the present model, further simulation with more varied populations are in process but have been slowed by the amount of computing time required. We also need to perform very robust experimental validation [15] of the findings.

Overall, this new model can be used to develop and test new electrodes and bring precious information on the technical nature of recorded signal. This will help in the design of more efficient and robust devices suitable for prolonged implantation which would finally permit a transfer of the neuroprostheses technology toward the patients in need.

ACKNOWLEDGMENT

We thank J. Miehlbradt for the final editing of the figures.

REFERENCES

[1] Micera, S. et al. "Decoding information from neural signals recorded using intraneural electrodes: toward the development of a neurocontrolled hand prosthesis." Proceedings of the IEEE 98.3 (2010): 407-417.

[2] Navarro, X. et al. "A critical review of interfaces with the peripheral nervous system for the control of neuroprostheses and hybrid bionic systems." Journal of the Peripheral Nervous System 10.3 (2005): 229-258.

[3] Rossini, P. M. et al. "Double nerve intraneural interface implant on a human amputee for robotic hand control." Clinical neurophysiology 121.5 (2010): 777-783.

[4] Dhillon, G. S. and Horch K. W. "Direct neural sensory feedback and control of a prosthetic arm." Neural Systems and Rehabilitation Engineering, IEEE Transactions on 13.4 (2005): 468-472.

[5] Richardson, A. G. et al. "Modelling the effects of electric fields on nerve fibres: influence of the myelin sheath." Medical and Biological Engineering and Computing 38.4 (2000): 438-446.

[6] Vallbo, Å. B., and Johansson R. S. "Properties of cutaneous mechanoreceptors in the human hand related to touch sensation." Hum Neurobiol 3.1 (1984): 3-14.

[7] Gold, C. et al. "On the origin of the extracellular action potential waveform: a modeling study." Journal of neurophysiology 95.5 (2006): 3113-3128.

[8] Jabaley, M. E. et al. "Internal topography of major nerves of the forearm and hand: a current view." The Journal of hand surgery 5.1 (1980): 1-18.

[9] Boretius, T. et al. "A transverse intrafascicular multichannel electrode (TIME) to interface with the peripheral nerve." Biosensors and Bioelectronics 26.1 (2010): 62-69.

[10] Raspopovic, S. et al. "A computational model for the stimulation of rat sciatic nerve using a transverse intrafascicular multichannel electrode." Neural Systems and Rehabilitation Engineering, IEEE Transactions on 19.4 (2011): 333-344.

[11] Bossetti, C. A. et al. "Analysis of the quasi-static approximation for calculating potentials generated by neural stimulation." Journal of neural engineering 5.1 (2008): 44.

[12] Robinson, D. A. "The electrical properties of metal microelectrodes." Proceedings of the IEEE 56.6 (1968): 1065-1071.

[13] Martinez, J. et al. "Realistic simulation of extracellular recordings." Journal of neuroscience methods 184.2 (2009): 285-293.

[14] Johnson, K. "Neural basis of haptic perception." Stevens' Handbook of Experimental Psychology (2002).

[15] Raspopovic, S. et al. "Experimental validation of a hybrid computational model for selective stimulation using transverse intrafascicular multichannel electrodes." Neural Systems and Rehabilitation Engineering, IEEE Transactions on 20.3 (2012): 395-404.